ROHDE&SCHWARZ

Manual

SWR BRIDGE
ZRB2 (50 Ohm)

373.9017.52
373.9017.53

SWR BRIDGE
ZRB2 (75 Ohm)

802.1018.73

Printed in West Germany

Table of Contents

Page

Technical Information

1 Use and Characteristics

1.1 Typical Uses

The SWR Bridge ZRB2 is a reflection coefficient measurement bridge and is used to measure the magnitude and phase of reflection coefficients of devices-under-test such as filters, attenuators, diplexers, directional couplers, amplifiers, mixers or terminating impedances. By conversion, the reflection coefficient yields the reflection attenuation, the standing wave ratio and the impedance of the device-under-test (see section 2.3). Fig. 1 shows a typical test setup where the SWR Bridge ZRB2 is used with a sweep generator and an indicator. Particularly suitable for such a setup are Sweep Generator SWP, and as indicator, Polyskop SWOB5, scalar Network Analyzer ZAS and Vector Analyzer ZPV; all from Rohde & Schwarz.

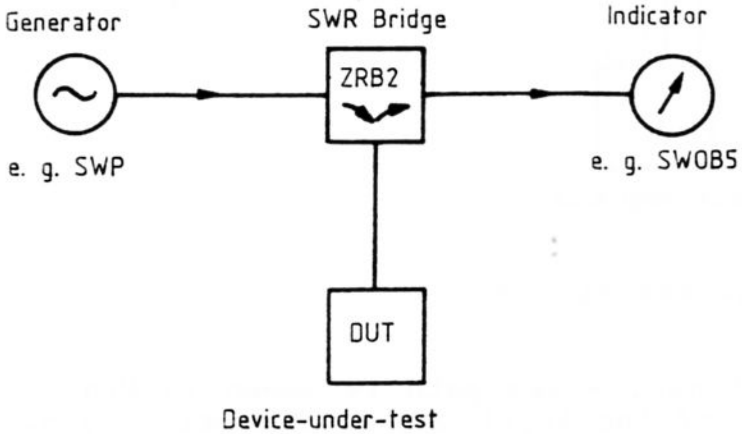

Fig. 1 Typical test setup for measuring the reflection coefficient of a device-under-test

The output signal from the generator is fed via the SWR Bridge ZRB2 to the device-under-test. Dependent on the reflection coefficient of the device-under-test, a part of the signal is reflected via the SWR bridge to the indicator. The signal applied to the input of the indicator is, with respect to phase and magnitude, a measure of the reflection coefficient r of the device-under-test. According to the type of indicator used, either the magnitude or magnitude and phase of the reflection coefficient is determined and displayed. Due to the high directivity of the SWR Bridge ZRB2 and the low reflection coefficient at the device-under-test connector on the bridge, measurements of high accuracy can be carried out.

1.2 Limits of Measurement Accuracy

Because of the unavoidable mechanical and electrical tolerances of the components used, it is not possible to manufacture a SWR bridge with completely ideal characteristics over the whole frequency range. The measurement errors caused are explained with reference to Fig. 2.

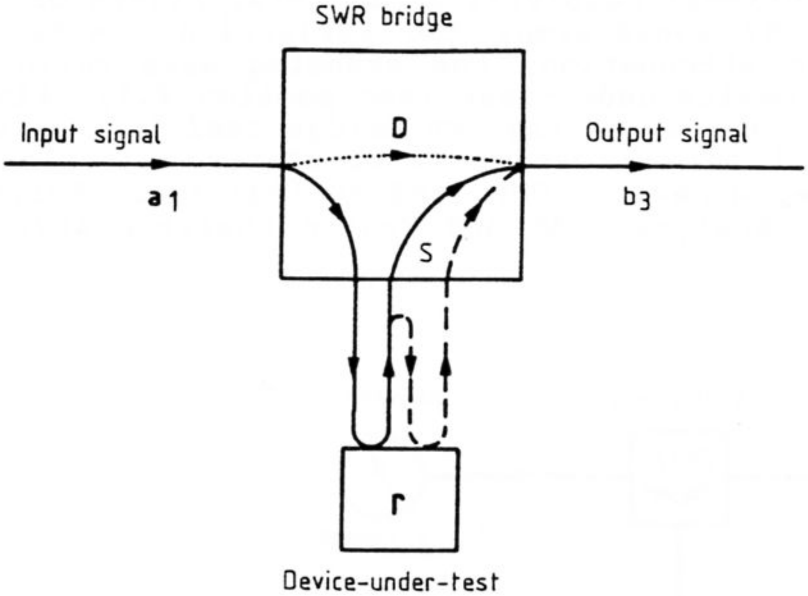

Fig. 2 Causes of measurement errors

Apart from the useful signal, whose path is shown in Fig. 2 as a solid line, a small part of the input signal directly reaches the output of the bridge (see dotted signal path). This is, in effect, crosstalk and is due to the finite directivity of the SWR bridge. A further error is caused by the input reflection coefficient S of the connector on the bridge for the device-under-test. A part of the signal reflected from the device-under-test is reflected back again by the device-under-test connector on the bridge. This signal is again partly reflected and eventually reaches the bridge (see dashed signal path). Neglecting multiple reflections at the bridge, the following relationship can be derived between the output signal b_3 and the input signal a_1 of the bridge.

$$b_3 = T\ (D + r + Sr^2)\ a_1 \tag{1}$$

where T = transmission loss

D = directivity

r = reflection coefficient of device-under-test

S = reflection coefficient of device-under-test connector on bridge

From equation (1) it can be seen that measurements of small reflection coefficients will be detrimentally affected by the finite directivity of the bridge. The relative measurement error increases with decreasing reflection coefficient. Reflection coefficients that are smaller than the directivity of the bridge cannot be measured.

With measurements of large reflection coefficients, the error introduced by the finite directivity of the bridge can be neglected. The accuracy of the measurement is now determined by the mismatch at the device-under-test connector.

2 Operation

2.1 Test Setup

The SWR Bridge ZRB2 is equipped with three N-type sockets (see Fig. 3).

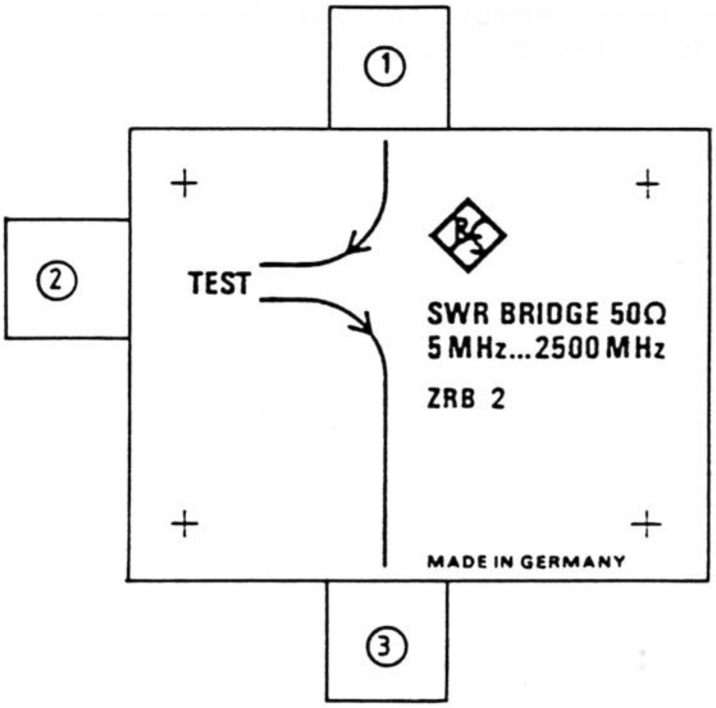

Fig. 3 Operation of the SWR Bridge ZRB2

The signal source (e.g. Sweep Generator SWP from Rohde & Schwarz) is usually applied to the connector of the bridge marked 1 in Fig. 3. If possible, the device-under-test is connected directly to connector 2 in order to avoid cable reflections interferring with the measurement. At the output, connector 3 of the bridge, a voltage is available which is proportional to the magnitude and phase of the reflection coefficient of the device-under-test. By use of a detector, this can be directly converted into a DC voltage or (via an N-type cable) connected to the measurement input of a scalar or vector network analyzer (e.g. Polyskop SWOB5, scalar Network Analyzer ZAS or Vector Analyzer ZPV).

In addition, it is to be noted that the bridge can be operated "inversely". The signal source is then connected to connector 3 and the indicator to connector 1. As before, the device-under-test is connected to connector 2. This arrangement enables the different insertion losses between the various connectors of the bridge to be used to advantage in certain measurement problems. The insertion loss between connectors 2 and 3 is typically 1 dB less than that between connectors 1 and 2.

2.2 Measuring the Reflection Coefficient

To measure the reflection coefficient r of a device-under-test, it is first necessary to calibrate the test setup for a total reflection. This requires a reflection coefficient $|r|$ = 100% to be achieved. (This corresponds to a return loss of a = 0 dB.) The simplest technique is to disconnect the device-under-test and thus derive and open-circuit calibration line. This calibration line represents the 0-dB reference line for all further measurements.

It should be noted that for very precise measurements, the open-circuit calibration line can deviate from the true 0-dB calibration line by a few tenths of dB because of the small but finite reflection coefficient of the device-under-test connector on the bridge. For precision measurements it is therefore recommended to carry out an additional calibration, whereby the device-under-test connector on the bridge is short circuited. The mean of the short-circuit and open-circuit calibration lines corresponds to the true 0-dB calibration line.

By reducing the output level of the signal generator, e.g. in 10-dB steps, further calibration lines (10 dB, 20 dB etc.) can be derived for specific return losses.

If an indicator with a logarithmic display is used, e.g. SWOB5 with plug-in E3, any desired value of the return loss can be simply determined with the aid of a digital display. Thus a useful addition to the test setup is the Digital Display Store BDS from Rohde & Schwarz, whereby the ease of measurement is increased and, for instance, the comparison of different devices is greatly simplified.

2.3 Conversion

Standard scalar indicators with logarithmic displays determine the return loss of a device-under-test in dB. From this, the magnitude of the reflection coefficient of the device in percent and the standing wave ratio (SWR) can be derived. The relationships between the parameters are given by the following formulae:

with r = reflection coefficient of the device-under-test
a = return loss in dB
s = standing wave ratio

$$\boxed{\begin{array}{ll} a = -20 \cdot \log|r| & |r| = 10^{-0.05 \times a} \\ s = \dfrac{1 + |r|}{1 - |r|} & |r| = \dfrac{s - 1}{s + 1} \end{array}} \qquad (2)$$

The measured value can easily be converted by using Table 1 or Fig. 7 which is also imprinted on the case of the SWR bridge.

Once the magnitude and in addition the phase of the measured reflection coefficient have been evaluated, the impedance of the device-under-test can be calculated with equation (3). Z_0 is the characteristic impedance (e.g. Z_0 = 50 Ω or 75 Ω).

$$Z = \frac{1 + r}{1 - r} \cdot Z_0 \qquad (3)$$

The impedance of a device can be derived by use of a Smith chart (see appendix).

2.4 Estimating Measurement Errors

Measurement errors can be caused by the finite directivity of the bridge and by reflections at the device-under-test connector.

As indicated by equation (1), measurements of small reflection coefficients are influenced by the directivity D of the bridge. Due to the vectorial superposition of the useful signal and the interference signal caused by the finite directivity of the bridge, an uncertainty exists in the determination of the reflection coefficient r of the device-under-test. Fig. 4 shows this graphically.

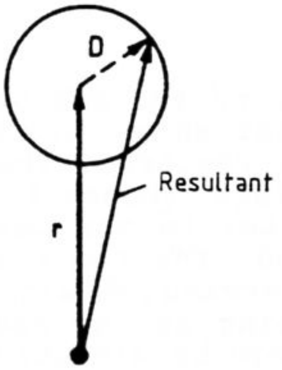

Fig. 4 Vectorial superposition of useful signal and directivity

Because of the phase angle between the useful signal r and the directivity D, the resultant, which is all that can in fact be measured, may have the limit values of $|r| + D$ or $|r| - D$. Alternatively, the measured value may deviate from the true value of the reflection coefficient by a maximum of ±D.

The error limits of logarithmic evaluation can be determined with the aid of Table 2 (see appendix). In the limiting case, where the reflection coefficient is as small as the directivity ($x = 0$ dB in Table 2), the phasors may either be doubled or reduced to zero. The maximum measurement error is then +6 dB or $-\infty$ dB.

With measurements of large reflection coefficients, measurement errors which can be caused by the finite directivity of the bridge are less than 0.1 dB and thus can be neglected. The error limits are then determined by the reflection coefficient of the device-under-test connector. As can be seen from equation (1), the greatest measurement uncertainty is when measuring a return loss of 0 dB, i.e. total reflection. The maximum measurement error that can be expected can also be taken from Table 2. With an input return loss at the device-under-test connector of 25 dB, for instance, a maximum measurement error of approximately ±0.5 dB is possible when measuring large reflection coefficients.

In general, however, the majority of results of practical measurements of return loss will lie within the middle of the range of values. The maximum error measurement errors to be expected are then smaller than the two limit cases. A quantitative description of this relationship is given in the appendix (Fig. 9).

3 Maintenance

3.1 Recommended Measuring Instruments

A generator and an indicator (e.g. Sweep Generator SWP and Polyskop SWOB5 from R&S) are required to check the specifications of the SWR Bridge ZRB2. In addition, a precision terminating impedance, a short-circuit connector and for checking the matching, a further SWR bridge and terminating impedance are required.

3.2 Checking the Matching

The matching at the device-under-test connector of the SWR bridge can be checked with a test setup similar to that shown in Fig. 1 (see section 1.1). A second SWR Bridge ZRB2 is required. The device-under-test connector of this second bridge (connector is identified with TEST) is connected via an adapter to the device-under-test connector of the bridge to be tested. The two remaining connectors of the bridge-under-test are terminated with reflectionless terminating impedances. The matching at the device-under-test connector of the tested bridge can now be directly determined just as with any other test item.

If a second SWR bridge is not available, an indication of the matching of the device-under-test connector can be gained from transmission measurements on the bridge-under-test (see section 3.3).

3.3 Checking the Insertion Loss

The insertion loss of the SWR bridge can also be checked with the test setup in Fig. 1. First the bridge is removed and the indicator connected directly to the generator. The display is calibrated to 0 dB. Now connect the SWR bridge to be tested to the setup as shown in Fig. 1. The device-under-test connector remains unterminated. The insertion loss can now be directly measured.

If the device-under-test connector of the bridge is short circuited, the insertion loss value deviates slightly due to the imperfect matching of the SWR bridge. The matching at the device-under-test connector corresponds to the data in the specifictions when the difference between the open- and short-circuit measurement results is not greater than 1.3 dB at any frequency.

3.4 Checking the Directivity

The test setup in Fig. 1 can also be used to check the directivity. After a 0-dB calibration and with the device-under-test connector being open circuit, a precision terminating impedance is connected. With the reflection coefficient of this terminating impedance taken into account, the display indicates the directivity of the SWR bridge.

In this way, large reductions in the directivity of the SWR bridge can be detected. The directivity of a serviceable bridge is, however, not so readily measureable in the higher frequency range since the required terminating impedances cannot be manufactured with the necessary precision.

4.1 Principle of Resistive Couplers

Wide-band reflectometer circuits cannot be realised by use of the common directional coupler, e.g. line coupler, since these only exhibit a bandwidth of a few octaves. In contrast, however, use of resistive couplers enable very wide bandwidths to be achieved. The specified frequency range of the SWR Bridge ZRB2 is, for instance, 5 MHz to 2.5 GHz corresponding to a bandwidth of nine octaves.

The basic circuit of resistive couplers (see Fig. 5) resembles the familiar Wheatstone bridge.

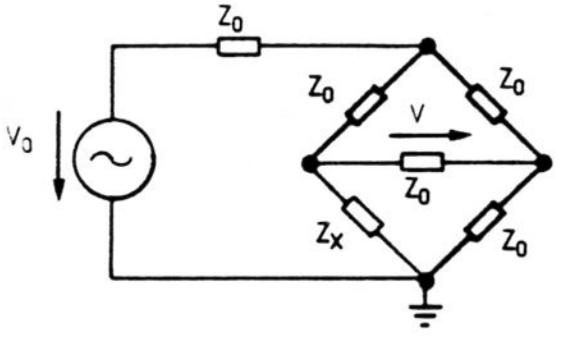

Fig. 5 Principle of resistive couplers

In this bridge circuit, the unknown impedance Z_x is compared with the reference impedance Z_0. Unlike the Wheatstone bridge circuit, the voltage V across the bridge diagonal is not adjusted to zero but it is measured and then evaluated. As can easily be shown, voltage V is given by equation (4).

$$V = \frac{1}{8} \cdot \frac{Z_x - Z_0}{Z_x + Z_0} . V_0 \qquad (4)$$

As can be seen, voltage V is a measure of the magnitude and phase of the reflection coefficient:

$$r = \frac{Z_x - Z_0}{Z_x + Z_0}$$ where Z_x = impedance of device-under-test

4.2 Design of the SWR Bridge

The SWR Bridge ZRB2 consists of the three heavily outlined impedances Z_0 in Fig. 5. Impedance Z_0 in the bridge diagonal is the internal impedance of the indicator and not a component part of the bridge; the same applies to the internal impedance Z_0 of the source. The signal source, the indicator and the device-under-test are connected to the SWR bridge via N-series coaxial connectors. To prevent the arms of the bridge from being short circuited, the voltage across the bridge diagonal must be tapped symmetrically with respect to ground. This is achieved by the balun shown in Fig. 6. It consists of a coaxial cable whose inner conductor is connected to the left-hand junction of the bridge diagonal and whose outer conductor is connected to the right-hand junction.

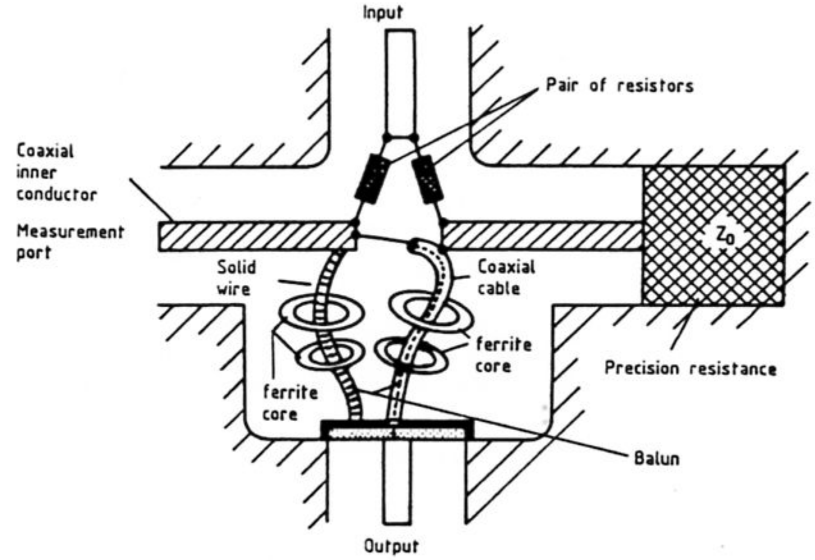

Fig. 6 Bridge schematic

The possibility of connecting the right-hand junction of the diagonal of the bridge to ground via the outer conductor of the coaxial cable is prevented by ferrite cores. These define the lower frequency limit of the SWR bridge. In order to achieve a wide bandwidth, two different types of ferrite cores are used in the SWR Bridge ZRB2. Nevertheless, the outer-conductor impedance of the coaxial cable is not infinitely high resulting in an unsymmetry of the bridge which brings about a deterioration of the directivity. To prevent this, the bridge must be made to balance. This is achieved by connecting a solid wire with ferrite cores to the left-hand junction of the bridge diagonal which "simulates" the outer-conductor impedance of the coaxial cable and tends to balance the bridge. The two ferrite cores on the simulated outer conductor are also of different type. To ensure that the quality of the SWR bridge is high, i.e. high directivity, the coaxial cable and the simulated outer conductor are constructed to be as mirror-symmetrical as possible.

A disadvantage is that the simulated outer conductor reduces the input impedance of the device-under-test connector. However, this can be compensated for by suitable selection of the heavily outlined impedances in Fig. 5. It can be shown that the three resistors need not have the value of Z_0. It is sufficient to have the upper pair as equal as possible and to use for the third impedance a precision resistance (see Fig. 6). In the SWR Bridge ZRB2, the value of the upper pair of resistors is selected to be greater than Z_0. In this way, the reduction in input impedance caused by the simulated outer conductor is compensated for and a good match of the device-under-test connector is achieved without influencing the directivity of the bridge. The precision resistance is a thin-film device. This allows the impedance of 50 Ω or 75 Ω to be as closely purely resistive as possible for the complete specified frequency range of the ZRB2.

5 Repair

Any defects that occur to the SWR bridge should only be remedied at the factory to ensure that the specifications are maintained. Please contact the nearest R&S representative.

6 Appendix

6.1 Conversion Table and Chart

Table 1 shows the relationship between the magnitude of the reflection coefficient r of the device under test in percent, the return loss a in dB and the standing wave ratio SWR. Fig. 7 is a graphical representation of Table 1. The relevant conversion formulae are given in section 2.3 (see equation (2)).

Table 1: Conversion table for the parameters r, a and SWR

Reflection coefficient $\lvert r \rvert$ in %	Return loss a	Standing wave ratio SWR
100.0000	0 dB	∞
89.1251	1 dB	17.3910
79.4328	2 dB	8.7242
70.7946	3 dB	5.8480
63.0957	4 dB	4.4194
56.2341	5 dB	3.5698
50.1187	6 dB	3.0095
44.6684	7 dB	2.6146
39.8107	8 dB	2.3229
35.4813	9 dB	2.0999
31.6228	10 dB	1.9250
28.1838	11 dB	1.7849
25.1189	12 dB	1.6709
22.3872	13 dB	1.5769
19.9526	14 dB	1.4985
17.7828	15 dB	1.4326
15.8489	16 dB	1.3767
14.1254	17 dB	1.3290
12.5893	18 dB	1.2880
11.2202	19 dB	1.2528
10.0000	20 dB	1.2222
8.9125	21 dB	1.1957
7.9433	22 dB	1.1726
7.0795	23 dB	1.1524
6.3096	24 dB	1.1347
5.6234	25 dB	1.1192
5.0119	26 dB	1.1055
4.4668	27 dB	1.0935
3.9811	28 dB	1.0829
3.5481	29 dB	1.0736
3.1623	30 dB	1.0653
2.8184	31 dB	1.0580
2.5119	32 dB	1.0515
2.2387	33 dB	1.0458
1.9953	34 dB	1.0407
1.7783	35 dB	1.0362
1.5849	36 dB	1.0322
1.4125	37 dB	1.0287
1.2589	38 dB	1.0255
1.1220	39 dB	1.0227
1.0000	40 dB	1.0202
0.8913	41 dB	1.0180
0.7943	42 dB	1.0160
0.7079	43 dB	1.0143
0.6310	44 dB	1.0127
0.5623	45 dB	1.0113
0.5012	46 dB	1.0101

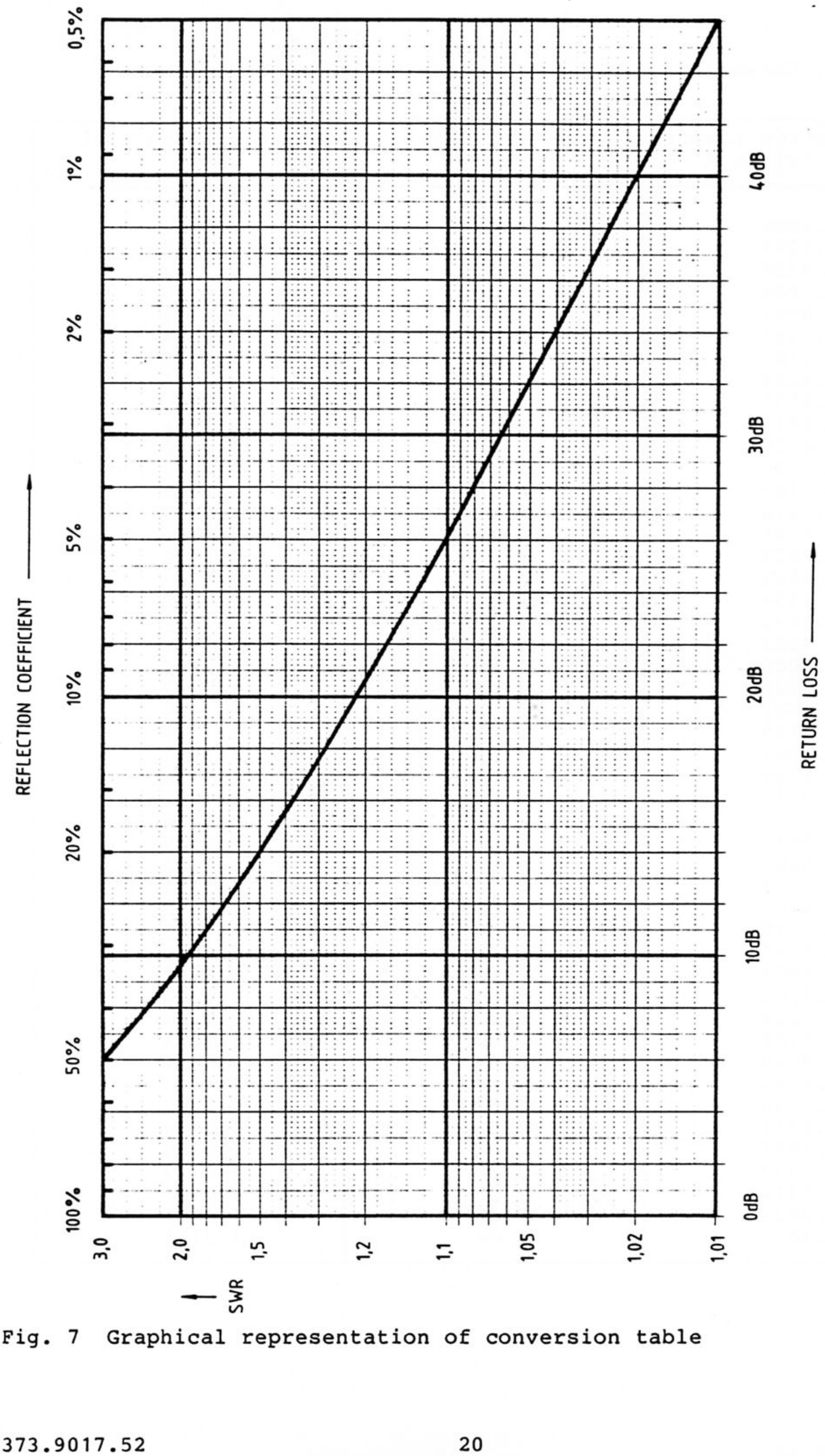

Fig. 7 Graphical representation of conversion table

6.2 Smith Chart

The relationship between the impedance Z of a device and its reflection coefficient r is given by equation (3) in section 2.3, i.e.:

$$Z = \frac{1 + r}{1 - r} \cdot Z_0$$

where Z_0 is the characteristic impedance (e.g. Z_0 = 50 Ω or 75 Ω).

This relationship is graphically represented by the Smith chart. After measuring the reflection coefficient r of a device in both magnitude and phase, its impedance Z can be easily determined by use of the Smith chart (see Fig. 8).

Fig.8: Smith Chart

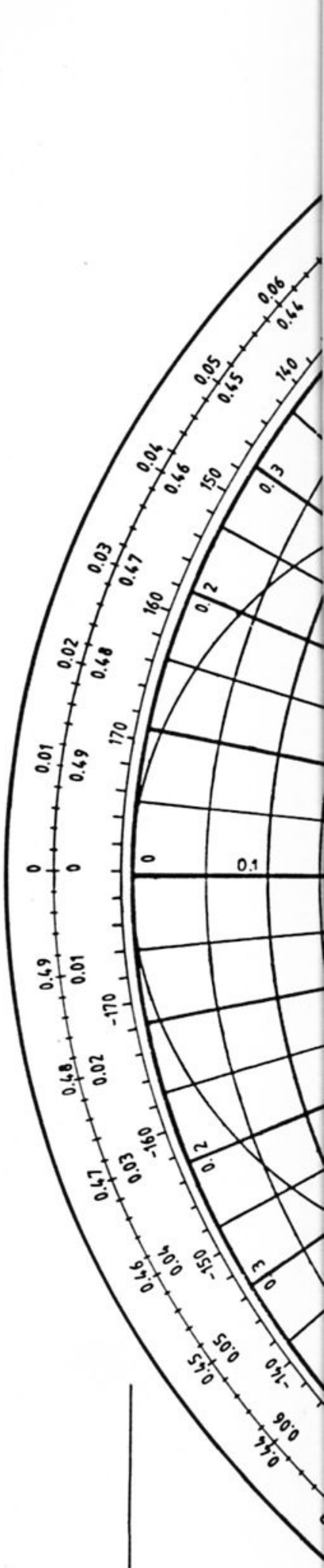

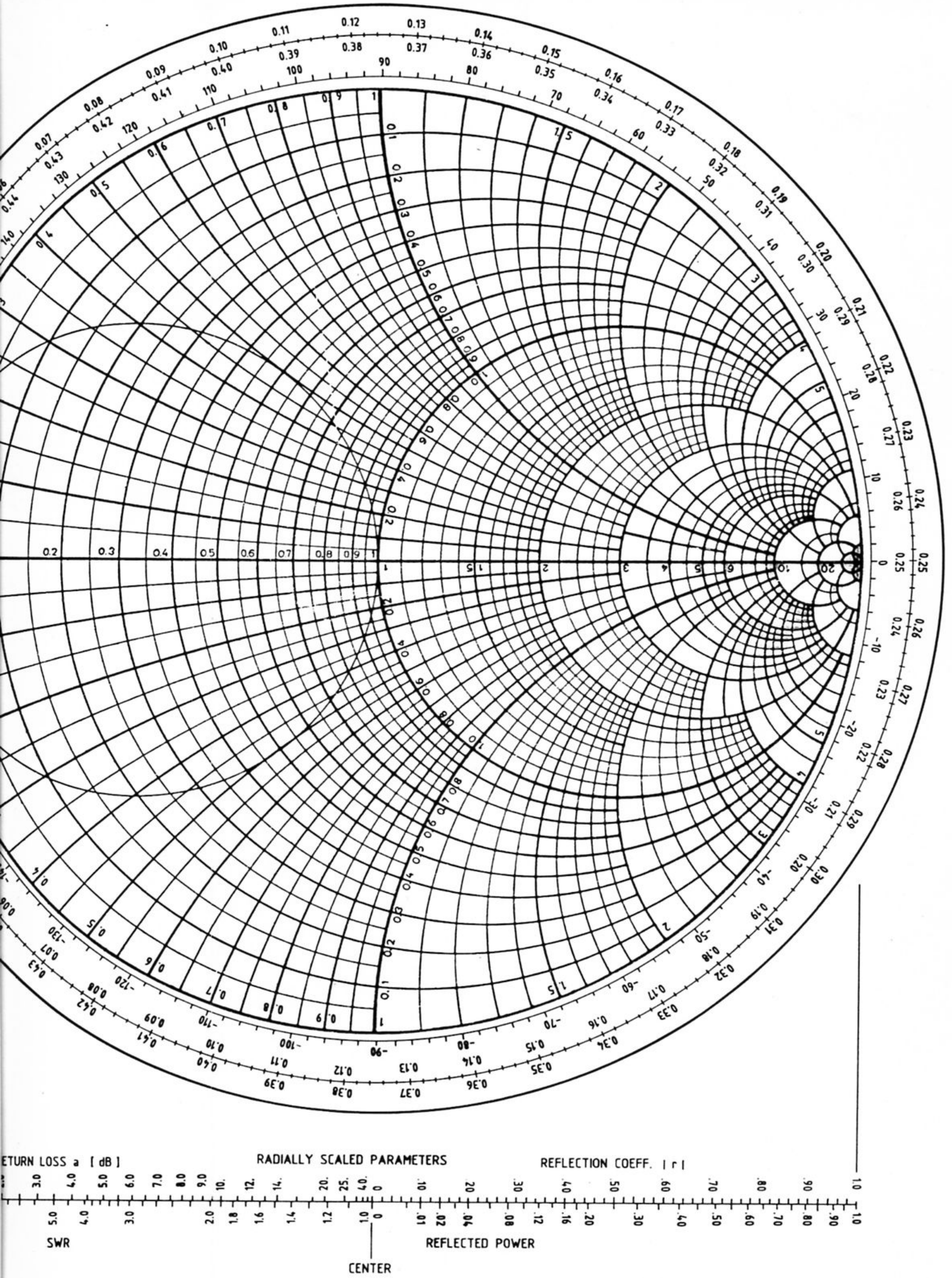
0.12
0.13
0.14
0.15
0.16
0.17
0.18
0.19
0.20
0.21
0.22
0.23
0.24
0.25
0.11
0.10
0.09
0.08
0.07
0.38
0.37
0.36
0.35
0.34
0.33
0.32
0.31
0.30
0.29
0.28
0.27
0.26
0.39
0.40
0.41
0.42
0.43
0.44
90
80
70
60
50
40
30
20
10
0
100
110
120
130
140
-10
-20
-30
-40
-50
-60
-70
-80
-90
-100
-110
-120
-130
0.2
0.3
0.4
0.5
0.6
0.7
0.8
0.9
1
1.5
2
3
4
5
6
10
20
ETURN LOSS a [dB]
RADIALLY SCALED PARAMETERS
REFLECTION COEFF. | r |
3.0
4.0
5.0
6.0
7.0
8.0
9.0
10.
12.
14.
20.
25.
40.
0
.10
.20
.30
.40
.50
.60
.70
.80
.90
1.0
5.0
4.0
3.0
2.0
1.8
1.6
1.4
1.2
1.0
.01
.02
.04
.08
.12
.16
.20
.30
.40
.50
.60
.70
.80
.90
SWR
REFLECTED POWER
CENTER

6.3 Error Estimation

As already explained in section 2.4, the evaluation of the reflection coefficient of a device-under-test is subject to errors due to the finite directivity of the SWR bridge. Using Table 2, the maximum measurement errors can be determined as a function of the reflection coefficient to be measured and of the directivity of the SWR bridge.

The values given in Table 2 are normalized to the reflection coefficient to be measured. In the fourth column, value x gives by how many dB the directivity of the SWR bridge is higher than the return loss to be measured. The two following columns give the error limits within which the true value of the return loss lies. The last column lists the error span in dB. In order to give a better overview, the relationships between the standing wave ratio, the reflection coefficient and the return loss are given once again.

Fig. 9 allows a quantitative determination of the maximum measurement error with respect to the measured return loss. The plotted curves represent the highest possible positive and negative deviations of the measured value from the true value of the return loss. In using Fig. 9, it is necessary to take into consideration not only the finite directivity of the SWR bridge of D = 40 dB or D = 46 dB but also an input reflection coefficient of S = 23 dB. It is to be noted, that these values represent the specified limit values of the ZRB2. In the middle of the frequency range of the SWR bridge, the directivity in particular is higher than given. Any measurement uncertainty that then occurs is lower than the limits plotted in Fig. 9.

Table 2

SWR	|r|	a [dB]	x [dB]	1 + x [dB]	1 - x [dB]	1 ± x [dB]
∞	1.0000	0	0	6.0206	- ∞	∞
17.3910	.8913	1	1	5.5350	-19.2715	24.8065
8.7242	.7943	2	2	5.0780	-13.7365	18.8145
5.8480	.7079	3	3	4.6495	-10.6907	15.3402
4.4194	.6310	4	4	4.2489	-8.6585	12.9073
3.5698	.5623	5	5	3.8755	-7.1773	11.0528
3.0095	.5012	6	6	3.5287	-6.0412	9.5699
2.6146	.4467	7	7	3.2075	-5.1405	8.3480
2.3229	.3981	8	8	2.9108	-4.4096	7.3204
2.0999	.3548	9	9	2.6376	-3.8063	6.4439
1.9250	.3162	10	10	2.3866	-3.3018	5.6884
1.7849	.2818	11	11	2.1567	-2.8756	5.0322
1.6709	.2512	12	12	1.9465	-2.5126	4.4590
1.5769	.2239	13	13	1.7547	-2.2013	3.9561
1.4985	.1995	14	14	1.5802	-1.9331	3.5133
1.4326	.1778	15	15	1.4216	-1.7007	3.1224
1.3767	.1585	16	16	1.2778	-1.4988	2.7766
1.3290	.1413	17	17	1.1476	-1.3227	2.4703
1.2880	.1259	18	18	1.0299	-1.1687	2.1986
1.2528	.1122	19	19	.9237	-1.0337	1.9574
1.2222	.1000	20	20	.8279	-.9151	1.7430
1.1957	.0891	21	21	.7416	-.8108	1.5524
1.1726	.0794	22	22	.6639	-.7189	1.3828
1.1524	.0708	23	23	.5941	-.6378	1.2319
1.1347	.0631	24	24	.5314	-.5661	1.0975
1.1192	.0562	25	25	.4752	-.5027	.9779
1.1055	.0501	26	26	.4248	-.4466	.8714
1.0935	.0447	27	27	.3796	-.3969	.7765
1.0829	.0398	28	28	.3391	-.3529	.6919
1.0736	.0355	29	29	.3028	-.3138	.6166
1.0653	.0316	30	30	.2704	-.2791	.5495
1.0580	.0282	31	31	.2414	-.2483	.4897
1.0515	.0251	32	32	.2155	-.2210	.4365
1.0458	.0224	33	33	.1923	-.1967	.3890
1.0407	.0200	34	34	.1716	-.1751	.3467
1.0362	.0178	35	35	.1531	-.1558	.3090
1.0322	.0158	36	36	.1366	-.1388	.2753
1.0287	.0141	37	37	.1218	-.1236	.2454
1.0255	.0126	38	38	.1087	-.1100	.2187
1.0227	.0112	39	39	.0969	-.0980	.1949
1.0202	.0100	40	40	.0864	-.0873	.1737
1.0180	.0089	41	41	.0771	-.0778	.1548
1.0160	.0079	42	42	.0687	-.0693	.1380
1.0143	.0071	43	43	.0613	-.0617	.1230
1.0127	.0063	44	44	.0546	-.0550	.1096
1.0113	.0056	45	45	.0487	-.0490	.0977
1.0101	.0050	46	46	.0434	-.0436	.0871
1.0090	.0045	47	47	.0387	-.0389	.0776
1.0080	.0040	48	48	.0345	-.0346	.0692
1.0071	.0035	49	49	.0308	-.0309	.0616
1.0063	.0032	50	50	.0274	-.0275	.0549
1.0057	.0028	51	51	.0244	-.0245	.0490
1.0050	.0025	52	52	.0218	-.0218	.0436
1.0045	.0022	53	53	.0194	-.0195	.0389
1.0040	.0020	54	54	.0173	-.0173	.0347
1.0036	.0018	55	55	.0154	-.0155	.0309
1.0032	.0016	56	56	.0138	-.0138	.0275
1.0028	.0014	57	57	.0123	-.0123	.0245
1.0025	.0013	58	58	.0109	-.0109	.0219
1.0022	.0011	59	59	.0097	-.0098	.0195
1.0020	.0010	60	60	.0087	-.0087	.0174

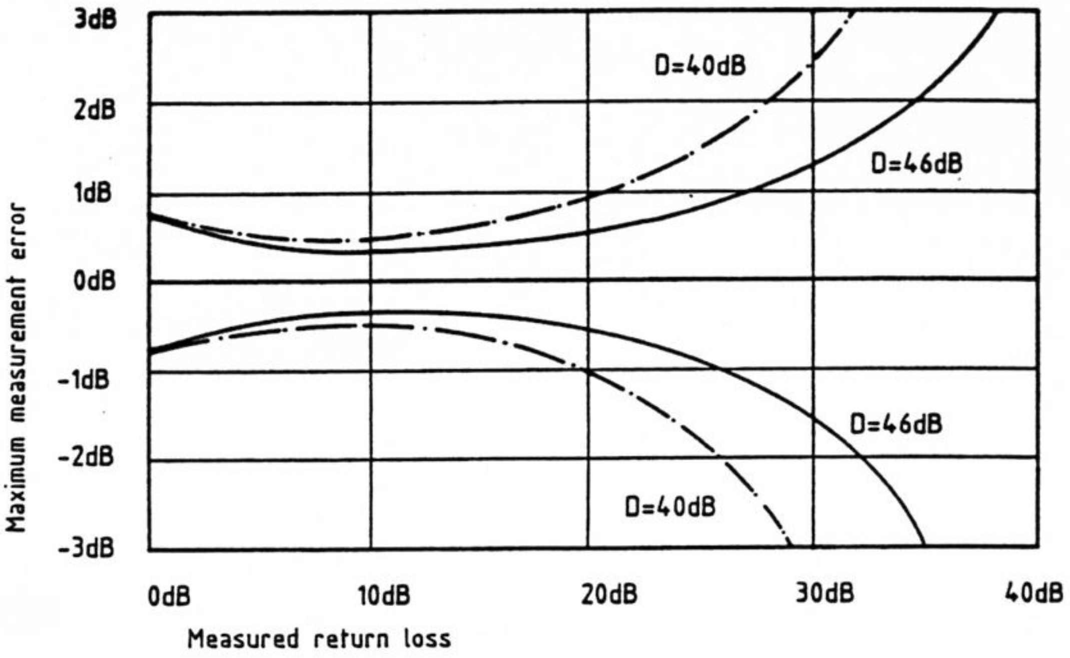

Fig. 9 Measurement error
Solid curve: D = 46 dB
Dashed curve: D = 40 dB

SWR BRIDGE ZRB 2

5 MHz to 2500 MHz

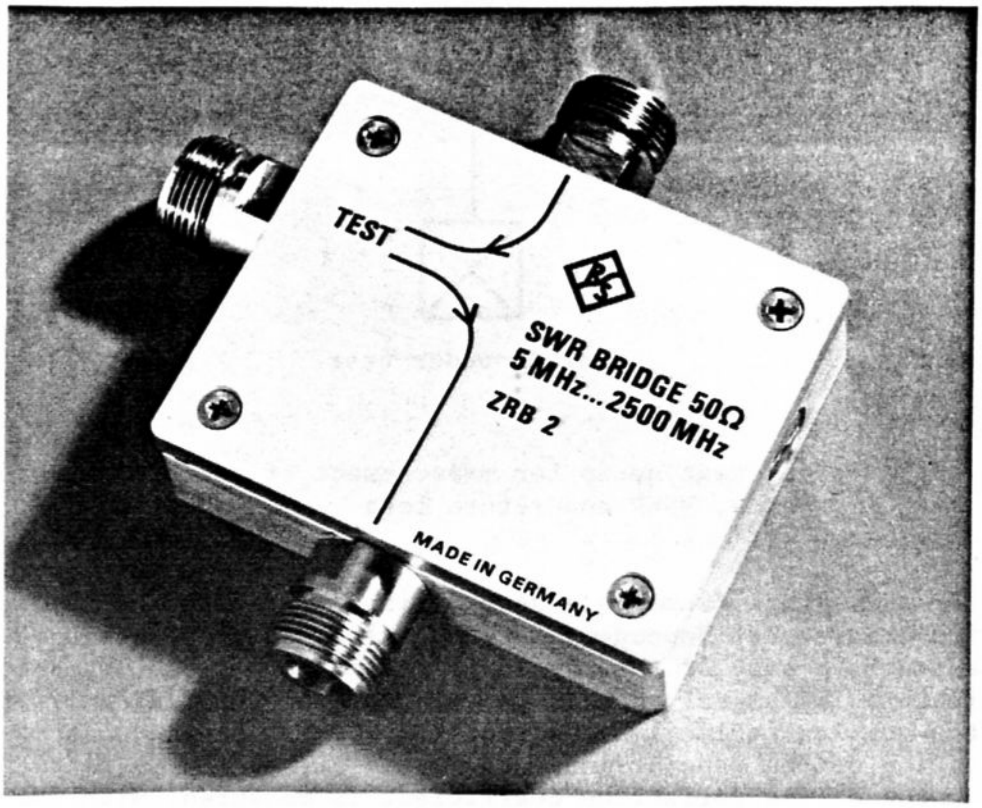

- Wide frequency range
- High directivity
- Good matching characteristics
- Sturdy construction

Uses

The SWR Bridge ZRB 2 is a reflection coefficient measurement bridge and is used to measure the magnitude and phase of reflection coefficients of devices-under-test such as filters, amplifiers, mixers or antennas. By conversion, the reflection coefficient yields the standing wave ratio (VSWR), the return loss and the impedance of the device-under-test. Fig. 1 shows a typical test setup where the SWR bridge is used with a sweep generator (e.g. SWP) and an indicator (e.g. ZPV or SWOB 5).

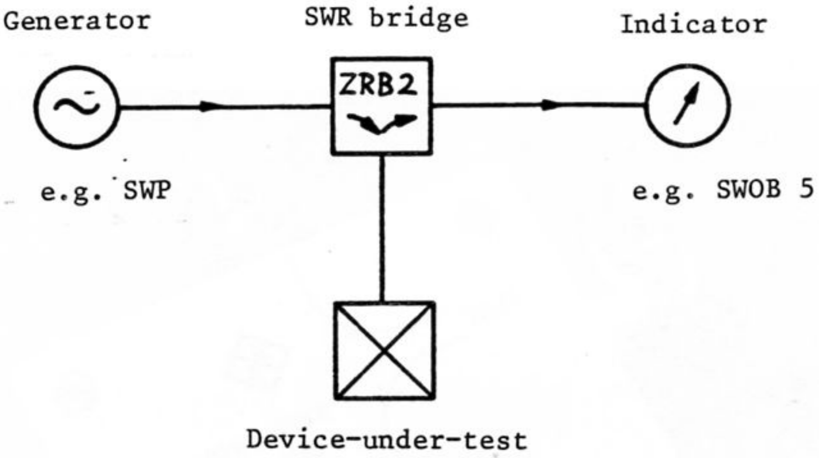

Fig. 1 Typical test setup for measurement of reflection coefficient, impedance, VSWR and return loss

The output signal from the generator is fed via the SWR bridge to the device-under-test. Dependent on the reflection coefficient of the device-under-test, a part of the signal is reflected via the SWR bridge to the indicator. The signal applied to the input of the indicator is a measure of the complex reflection coefficient r of the device-under-test. Depending on the type of indicator used, either the magnitude or magnitude and phase of the reflection coefficient is measured. With the aid of Vector Analyzer ZPV, the measured reflection coefficient can be converted into other parameters, e.g. the impedance or admittance of the device-under-test. In this case, display is possible both with respect to magnitude and phase, and real and imaginary part.

Measurement Accuracy

Because of unavoidable mechanical and electrical tolerances, it is not possible to manufacture a SWR bridge with completely ideal characteristics over the whole frequency range. The measurement errors caused are explained with reference to Fig. 2.

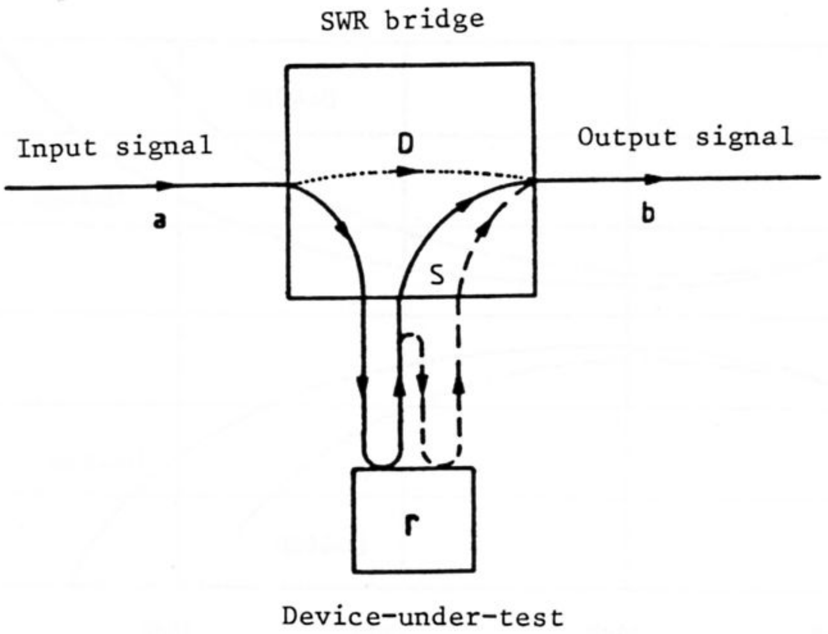

Fig. 2 Causes of measurement errors

Apart from the useful signal (solid line), a small part of the input signal directly reaches the output of the bridge (dotted signal path). This is, in effect, crosstalk and is due to the finite directivity D of the SWR bridge. A further error (dashed signal path) is caused by the input reflection coefficient S of the connector on the bridge for the device-under-test. A part of the signal reflected from the device-under-test is reflected back again by the device-under-test connector on the bridge. This signal is again partly reflected and eventually reaches the bridge. Neglecting multiple reflections at the bridge, the following relationship can be derived between the output signal and the input signal of the bridge:

$$b = T\,(D + r + S \cdot r^2)\,a$$

where T = transmission loss, D = directivity, r = reflection coefficient of device-under-test and S = reflection coefficient of device-under-test connector on bridge.

From this equation, it can be seen that measurements of small reflection coefficients will be detrimentally affected by the finite directivity of the bridge. The relative measurement error increases with decreasing reflection coefficient. Reflection coefficients that are smaller than the directivity of the bridge cannot be measured directly. With measurements of large reflection coefficients, the error introduced by the finite directivity of the bridge can be neglected. The accuracy of the measurement is now determined by the mismatch at the device-under-test connector. With a directivity of 46 dB and a reflection coefficient of the device-under-test connector of 23 dB, the maximum absolute error with respect to the reflection coefficient to be measured will be $0.005 + 0.07\,|r|^2$.

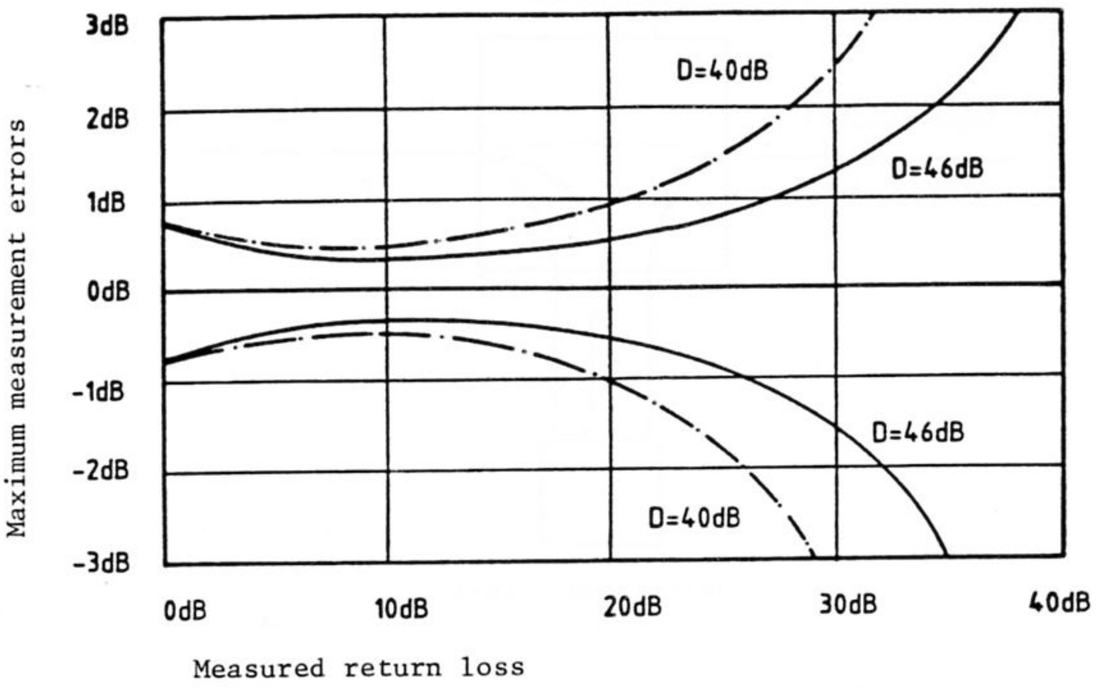

Fig. 3 Maximum measurement errors with an assumed reflection coefficient of the device-under-test connector of S = 23 dB (VSWR = 1.15) and a directivity of D = 46 dB and D = 40 dB

Fig. 3, which shows the maximum measurement error to be expected with respect to the measured return loss, allows a quantitative determination of this relationship. The plotted curves represent the highest possible positive and negative deviations of the measured value from the true value of the return loss. It is to be noted that these values represent the specified limit values of the ZRB 2. For the lower and middle frequency ranges, both the matching at the device-under-test connector (typ. > 28 dB) and the directivity (typ. > 50 dB) are higher than given. Any measurement uncertainty that then occurs is lower than the limits plotted and can in most cases be neglected for practical measurements.

Specifications

	50-Ω precision model 52	50-Ω standard model 53	75-Ω model 73
Frequency range	5 to 2500 MHz	5 to 2500 MHz	5 to 2000 MHz
VSWR	50 Ω	50 Ω	75 Ω
Directivity	≥46 dB up to 2 GHz ≥40 dB up to 2.5 GHz	≥40 dB	≥40 dB
Matching at test item conn.	≥23 dB up to 2 GHz ≥20 dB up to 2.5 GHz	≥23 dB up to 2 GHz ≥20 dB up to 2.5 GHz	≥20 dB up to 1.5 GHz ≥18 dB up to 2 GHz
Insertion loss			
Total	13 dB	13 dB	14 dB
Meas. port inp.	7 dB	7 dB	8 dB
Meas. port outp.	6 dB	6 dB	6 dB
Measurement error	$0.005+0.07\|r\|^2$ up to 2 GHz $0.01+0.1\|r\|^2$ up to 2.5 GHz	$0.01+0.07\|r\|^2$ up to 2 GHz $0.01+0.1\|r\|^2$ up to 2.5 GHz	$0.01+0.1\|r\|^2$ up to 1.5 GHz $0.01+0.13\|r\|^2$ up to 2 GHz
	($\|r\|$ = measured reflection factor)		
Load capacity	0.5 W		
Connectors	precision N socket		
Dimensions without connectors	71.5 mm x 57.3 mm x 20.0 mm		
Length of connectors	16.6 mm		
Weight	240 g		
Storage temperature range	-40°C to 70°C		
Operating temperature range	0°C to 50°C		
Order designation	► SWR Bridge ZRB2		
Order number	373.9017.52	373.9017.53	802.1018.73

1VA-0152-d
ost-wk 4.84
5ZWU-Ei-e
5.84

Typical characteristic and limit values for return loss S at the measurement port and directivity D of SWR Bridge ZRB2

50-Ω precision model 52

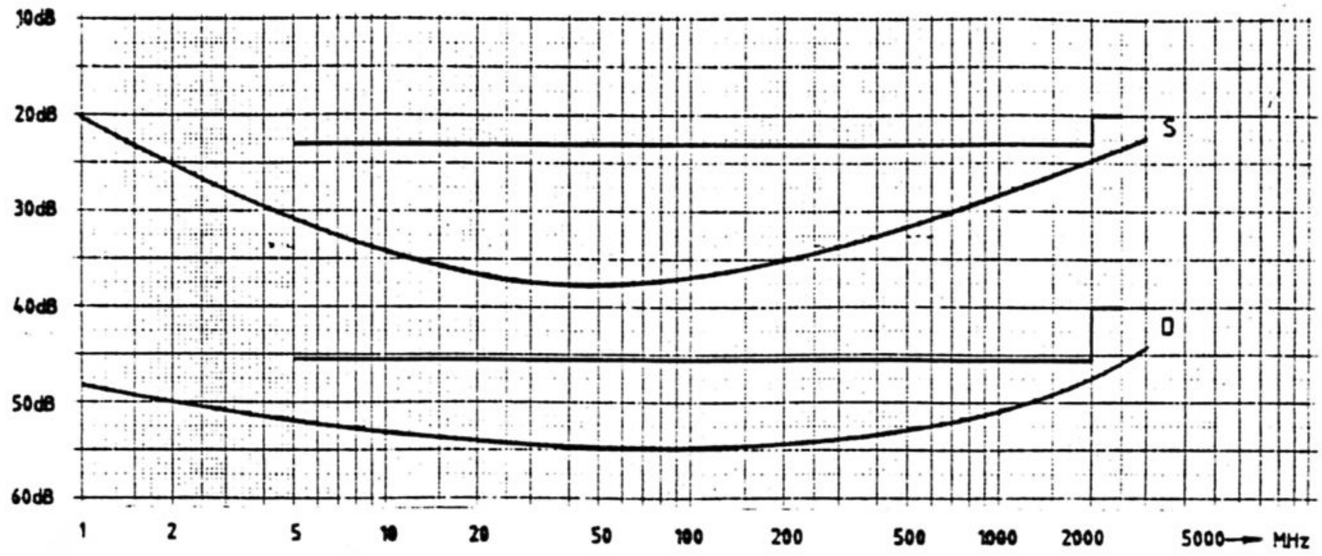

50-Ω standard model 53

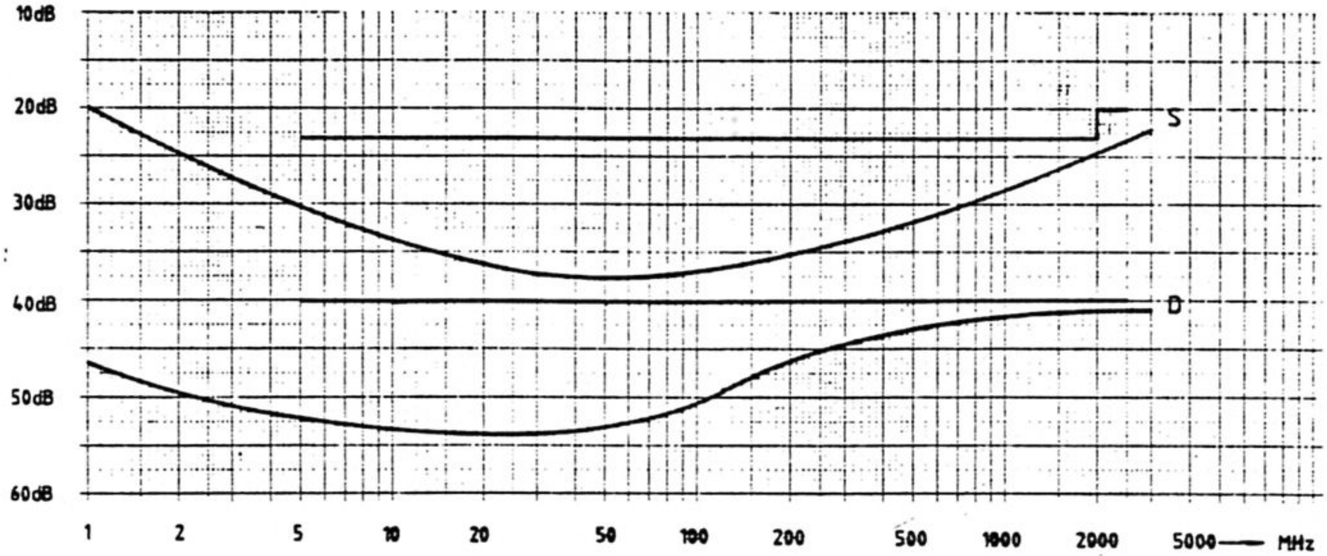

75-Ω model 73